QUICK START GUIDE

EVAL_PMG1_B1_DRP kit

The EVAL_PMG1_B1_DRP is an evaluation kit for EZ-PD™ PMG1-B1 USB Power Delivery (PD) Microcontroller (MCU) with integrated buck-boost battery charger. EZ-PD™ PMG1-B1 is targeted for battery powered applications that sink or source power through USB-C port and needs a MCU to implement product features. Some of the target applications include cordless power tool chargers, wireless speakers, and portable electronics. The kit can be used to sink up to 100 W (20 V @ 5 A) and source up to 27 W (9 V @ 3 A). The kit can also be used to charge 2-5 cell batteries with the ability to customize the battery charging algorithm based on customer needs.

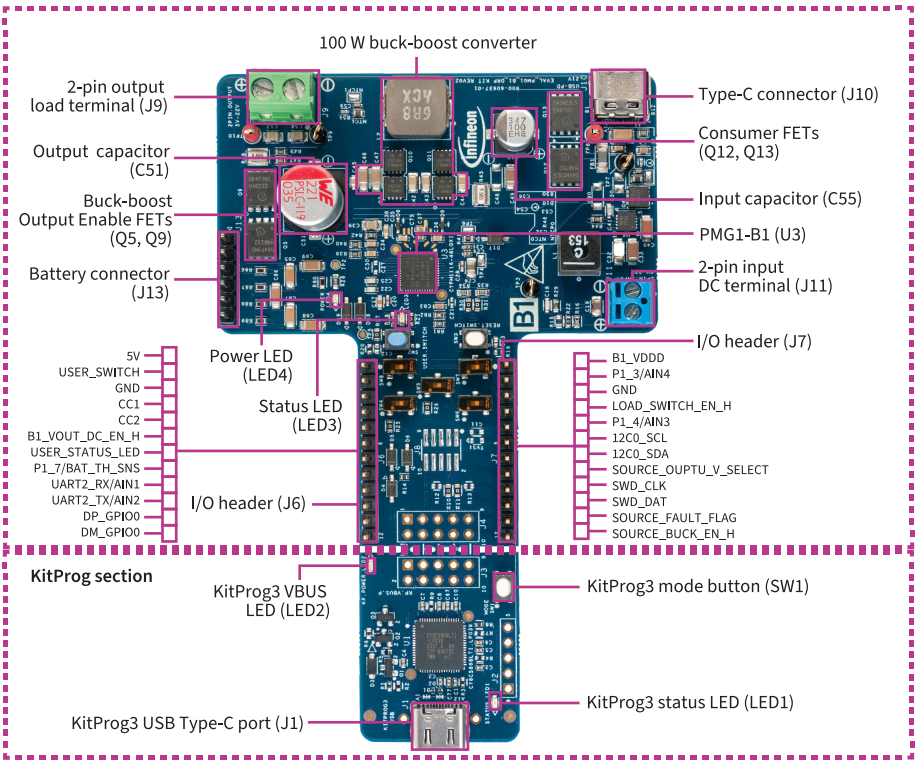

www.infineon.com/EVAL_PMG1_B1_DRP

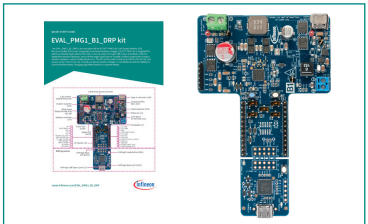

EVAL_PMG1_B1_DRP kit contents

Before you start

- Ensure that you have a USB PD 3.1 capable USB-C power adapter (e.g., Apple 96 W USB-C power adapter) with a compatible USB PD 3.1 capable Type-C cable.
- Ensure that you have a power supply or AC/DC power adapter with 15V, 2A.

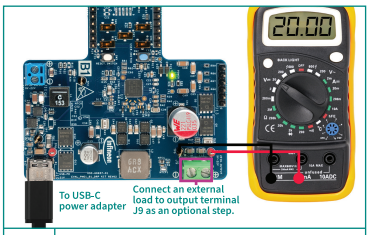

1 Evaluating DRP functionality (sink mode)

Step 1: Evaluating DRP functionality (sink mode)

1. Connect the USB-C PD port (J10) of the EVAL_PMG1_B1_DRP kit to the USB-C power adapter using the USB-C cable.
2. To confirm that board is powered, verify that LED4 (Power LED) is ON (green). Additionally, verify that LED3 (Status LED) is blinking (green) to confirm the sink mode functionality.
3. (Optional): Connect a DC load (with 20 V and less than 14 W of power) to the output terminal (J9 - green color) of the EVAL_PMG1_B1_DRP kit. Verify that the output voltage is 20 V across the test points TP10 (+ve) and TP9 (GND) using a multimeter.

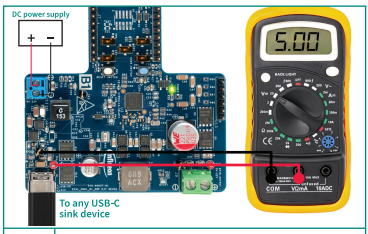

2 Evaluating DRP functionality (source mode)

Step 2: Evaluating DRP functionality (source mode)

1. Disconnect all connections from the previous step and connect a 12 V to 20 V DC power supply with up to 3 A current rating to the input DC terminal (J11 - blue color).
2. Connect the USB-C sink device (e.g., a USB-C capable phone or a laptop supporting USB-C charging) to the USB-C PD port (J10) using a USB-C cable.
3. Verify that LED4 (Power LED) is ON (green) to confirm that the board is powered and LED3 (Status LED) is ON (green) to confirm source mode functionality.
4. Verify the charging status on the connected device. Optionally, using a multimeter, measure the voltage between test points TP8 (+ve) and TP7 (GND). The voltage should either be 5 V or 9 V depending on the connected USB-C sink device.

Next steps

- Download and unzip the EVAL_PMG1_B1_DRP release package from the EVAL_PMG1_B1_DRP kit webpage (www.infineon.com/EVAL_PMG1_B1_DRP).
- See the EVAL_PMG1_B1_DRP kit user guide (available as part of the EVAL_PMG1_B1_DRP kit release package) to learn more about the kit features and how to develop applications using ModusToolbox™ software.

QR label to be placed on this box

Document number: 002-37700 Rev. *A
Date: 10 / 2023

Published by Infineon Technologies AG
81726 Munich, Germany

All rights reserved. © 2023
Infineon Technologies AG